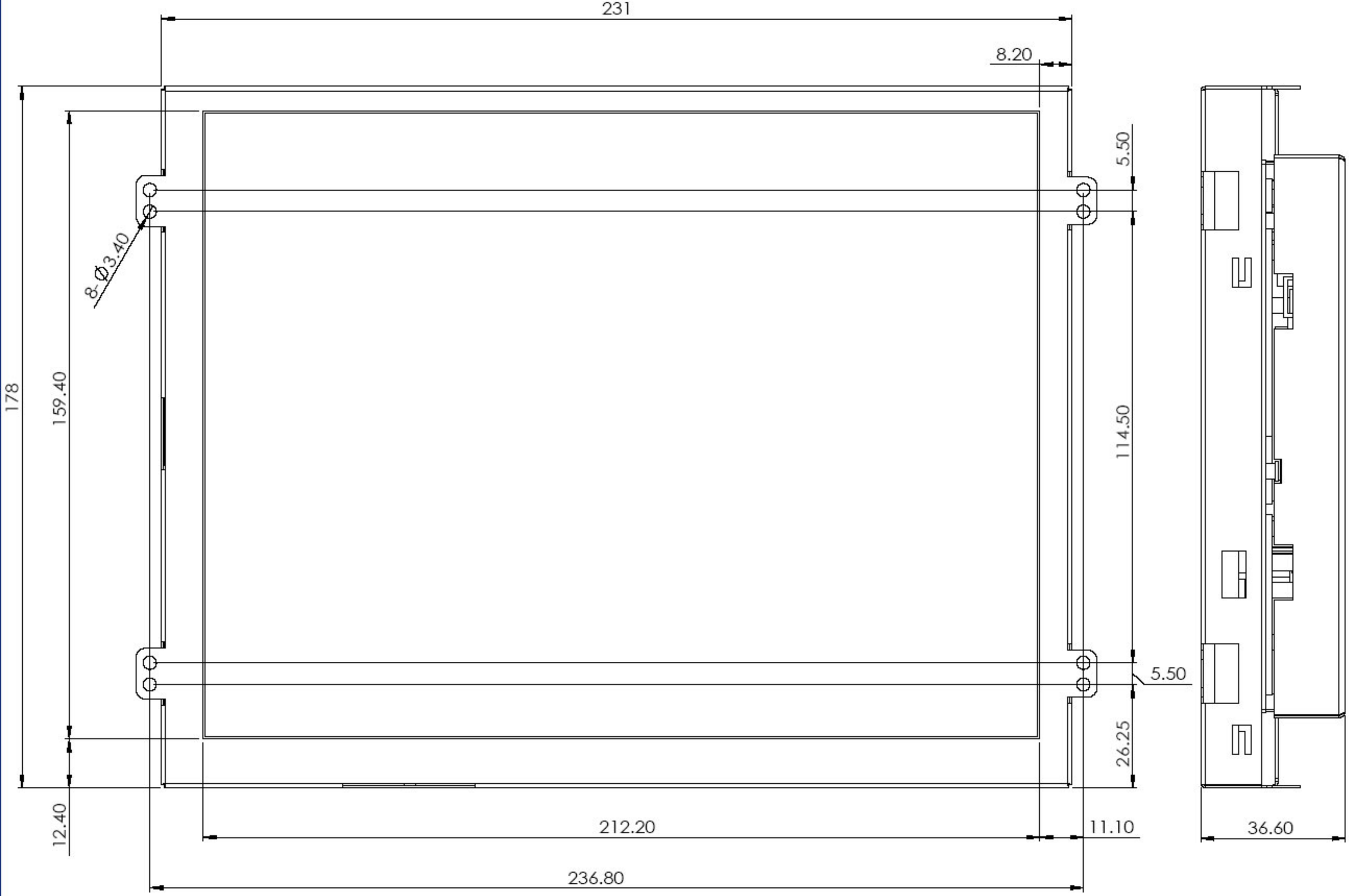
231
8.20
5.50
8-Ø3.40
178
159.40
114.50
5.50
26.25
12.40
212.20
11.10
236.80
36.60

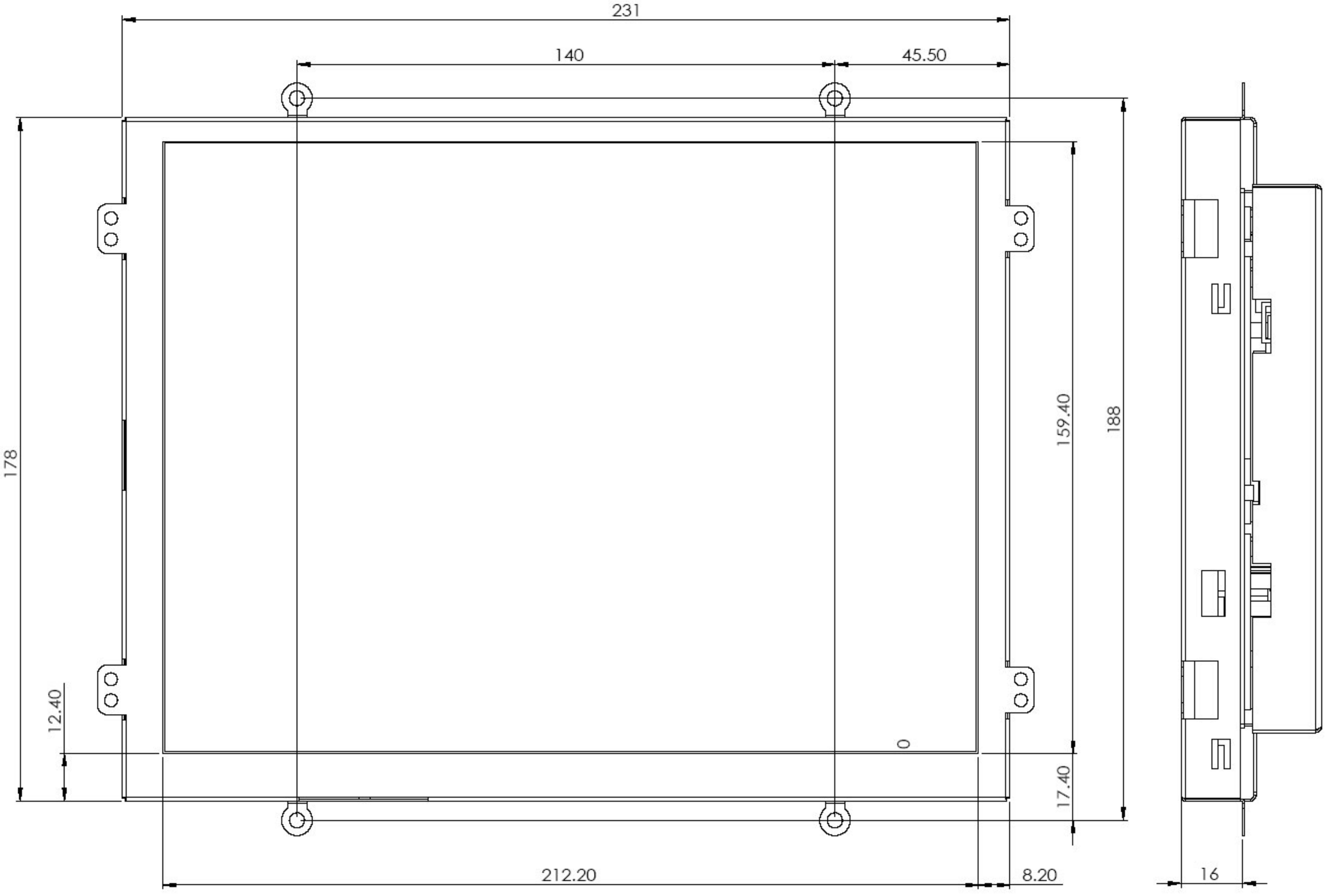
231
140
45.50
178
12.40
159.40
188
17.40
212.20
8.20
16